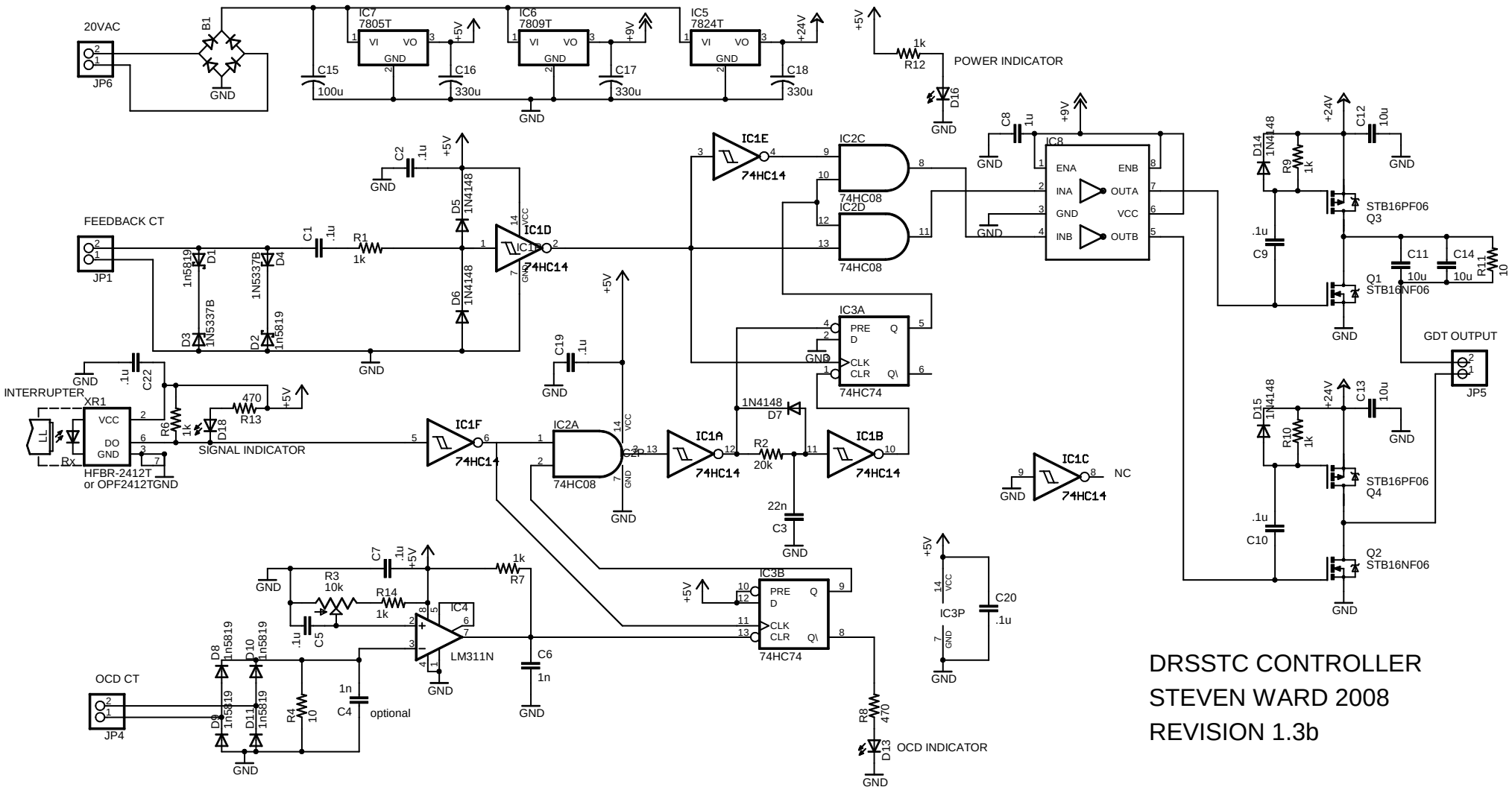

6/25/2009 11:57:22a f=0.80 C:\eagle files\drsstc\1.3\DRSSTC_pndriver1_3.sch (Sheet: 1/1)