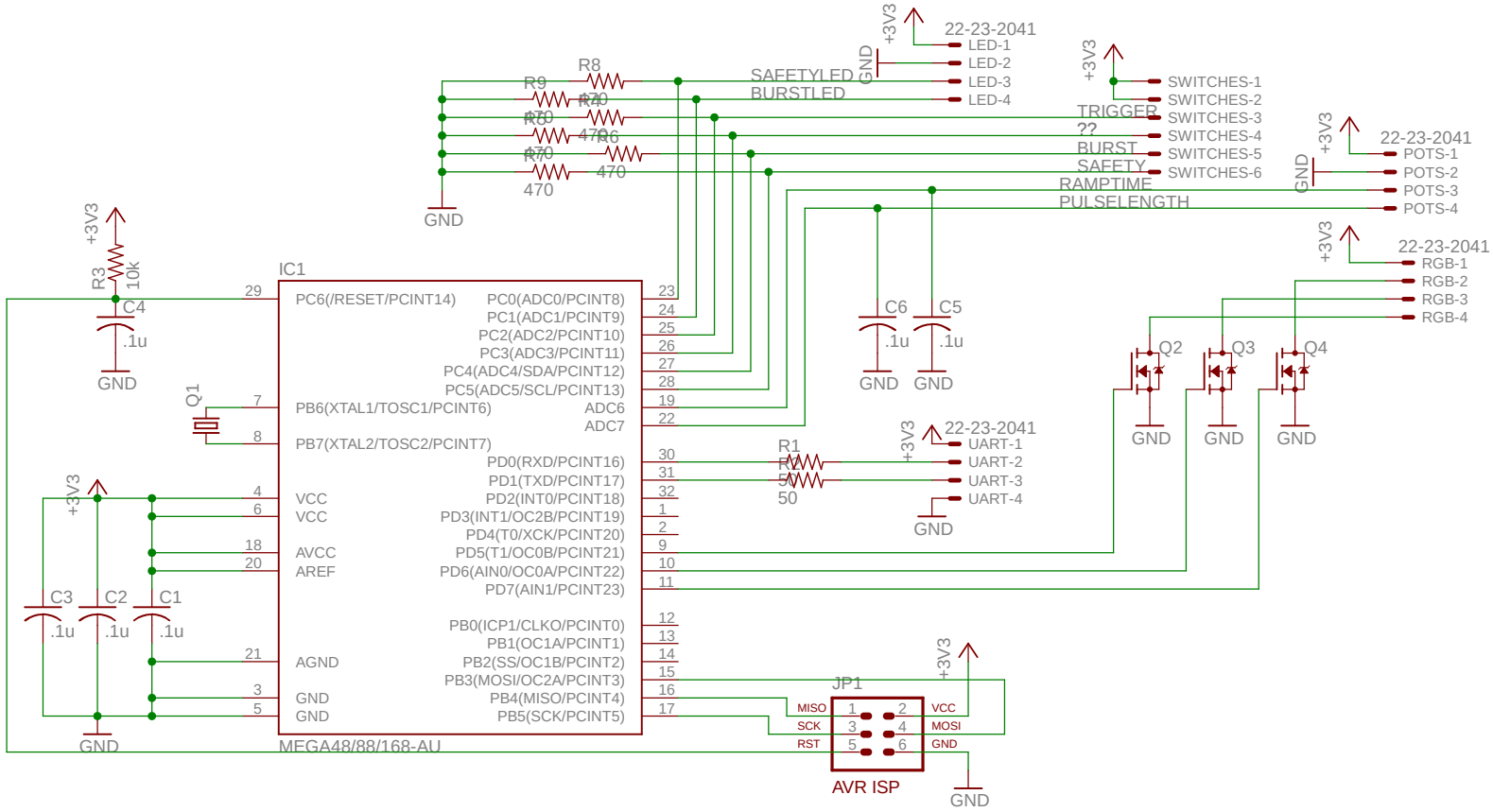
IC1
MEGA48/88/168-AU
PC6(/RESET/PCINT14)
PC0(ADC0/PCINT8)
PC1(ADC1/PCINT9)
PC2(ADC2/PCINT10)
PC3(ADC3/PCINT11)
PC4(ADC4/SDA/PCINT12)
PC5(ADC5/SCL/PCINT13)
PB6(XTAL1/TOSC1/PCINT6)
ADC6
ADC7
PB7(XTAL2/TOSC2/PCINT7)
PD0(RXD/PCINT16)
PD1(TXD/PCINT17)
PD2(INT0/PCINT18)
PD3(INT1/OC2B/PCINT19)
PD4(T0/XCK/PCINT20)
PD5(T1/OC0B/PCINT21)
PD6(AIN0/OC0A/PCINT22)
PD7(AIN1/PCINT23)
PB0(ICP1/CLKO/PCINT0)
PB1(OC1A/PCINT1)
PB2(SS/OC1B/PCINT2)
PB3(MOSI/OC2A/PCINT3)
PB4(MISO/PCINT4)
PB5(SCK/PCINT5)
VCC
AVCC
AREF
AGND
GND
R3 10k
C4 .1u
Q1
C3 .1u
C2 .1u
C1 .1u
R9 470
R8 470
R7 470
R6 470
R5 470
R4 470
R1 50
R2 50
C6 .1u
C5 .1u
22-23-2041
LED-1
LED-2
LED-3
LED-4
SAFETYLED
BURSTLED
SWITCHES-1
SWITCHES-2
SWITCHES-3
SWITCHES-4
SWITCHES-5
SWITCHES-6
TRIGGER
??
BURST
SAFETY
RAMPTIME
PULSELENGTH
POTS-1
POTS-2
POTS-3
POTS-4
RGB-1
RGB-2
RGB-3
RGB-4
Q2
Q3
Q4
UART-1
UART-2
UART-3
UART-4
JP1
MISO
SCK
RST
VCC
MOSI
GND
AVR ISP
+3V3