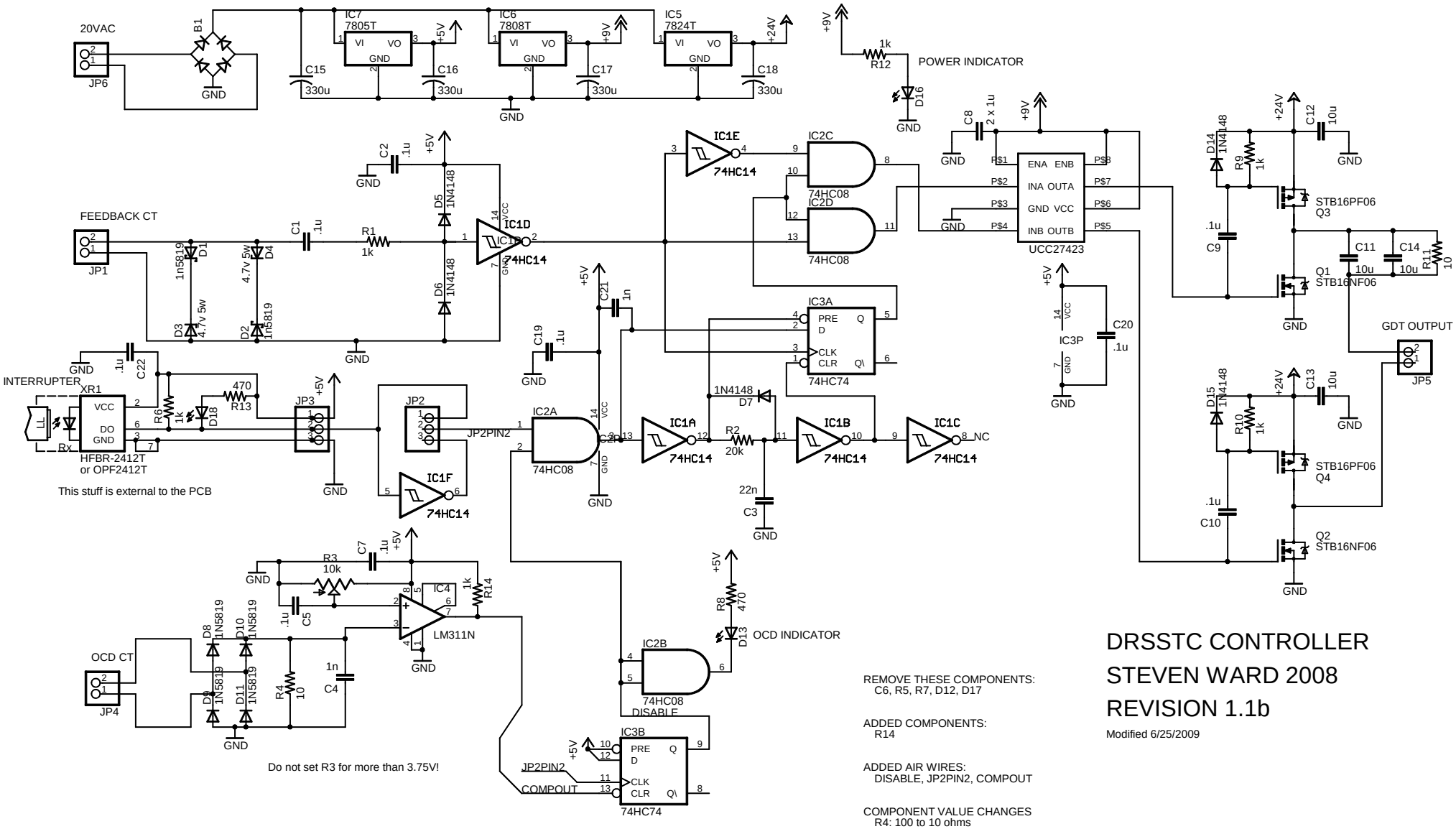

DRSSTC CONTROLLER
STEVEN WARD 2008
REVISION 1.1b

Modified 6/25/2009

REMOVE THESE COMPONENTS:
C6, R5, R7, D12, D17

ADDED COMPONENTS:
R14

ADDED AIR WIRES:
DISABLE, JP2PIN2, COMPOUT

COMPONENT VALUE CHANGES
R4: 100 to 10 ohms
D8-11: 1n4148 to 1n5819
C4: 100nF to 1nF