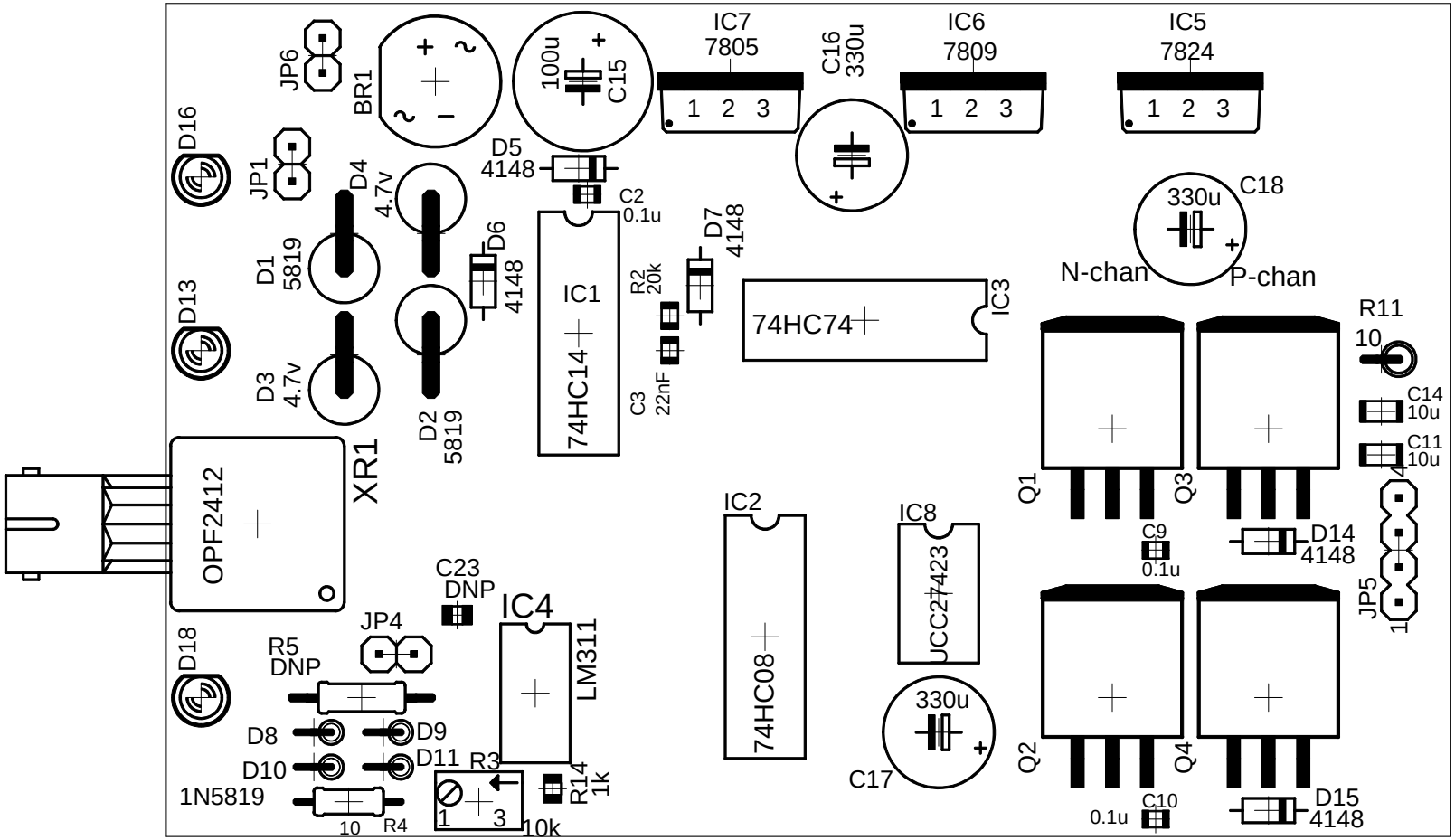

DNP = Do Not Place